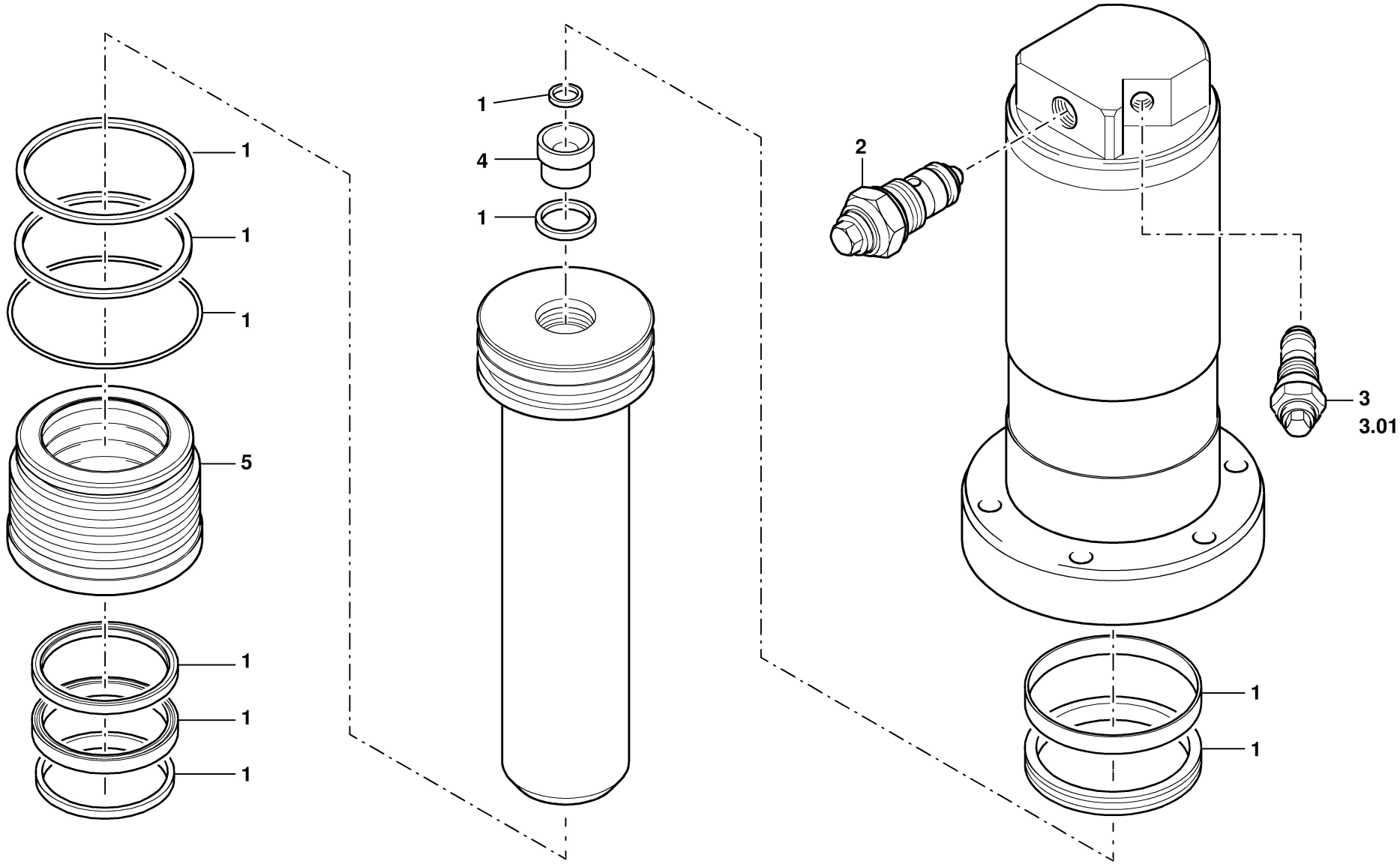GROVE	DIFFERENTIALZYLINDER DIFFERENTIAL CYLINDER	BILDTAFEL PICTORIAL DISPLAY			GMK 6220 BE 650 G 786
		03.03	3319658-ETL A	1/1